Rev No.	Description	Date	Name
A	First light	06/02/07	A.Vismara
B	New LED holder	10/05/08	A.Vismara

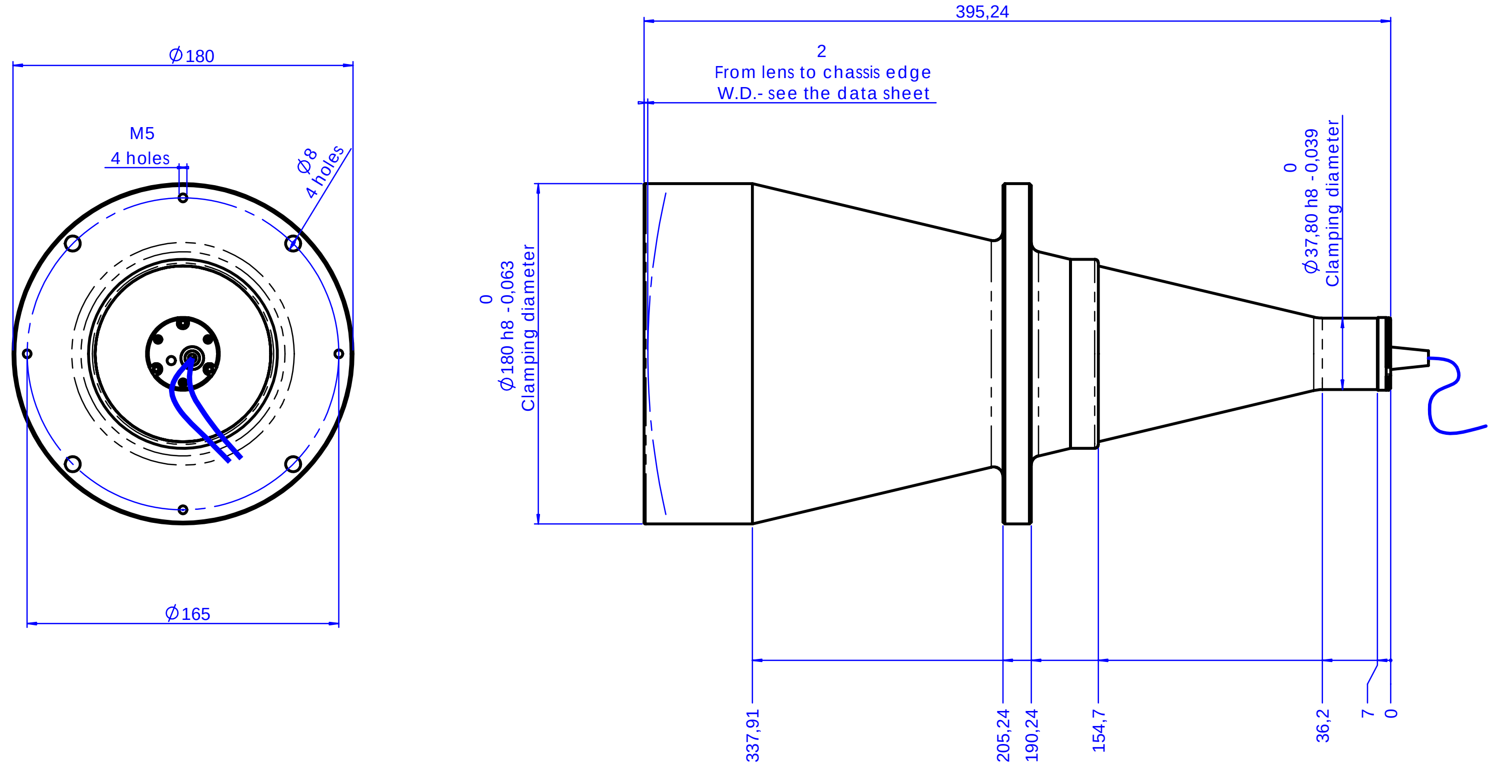

Material	N.A.	Mass 4.9 kg	Scale 1:2
Surface treatment	N.A.	Project-Prod.item/Instrument	LT CL 120

Geometrical tolerance (ISO 2768-2)	Class K	Undimensioned bevels	1x45°
Linear tolerance (ISO 2768-1)	Class m	Undimensioned radii	R 0.5

0.5 ÷3	>3÷ 6	>6÷ 30	>30÷ 120	>120 ÷400	>400÷ 1000	>1000 ÷2000	>2000 ÷4000
±0.1	±0.1	±0.2	±0.3	±0.5	±0.8	±1.2	±2

Description: Assembly

	Date	Name
Designed	10/05/08	A.Vismara
Draw	10/05/08	A.Vismara
Checked	x	C.Sedazzari

Drawing No. 01281-0-B — Sheet 1/1

www.opto-engineering.com

Reproduction forbidden without specific authorization

OPTO ENGINEERING S.r.l. - 46100 Mantova Italy - Via Cremona, 29/2 - Tel. +39 0376 263525 - e-mail: info@opto-engineering.com - http://www.opto-engineering.com

0 1 2 3 4 5 6 7 8 9 10