Rev No.	Description	Date	Name
A	First light	01/05/03	A.Vismara
D	Redesign	24/03/06	A.Vismara

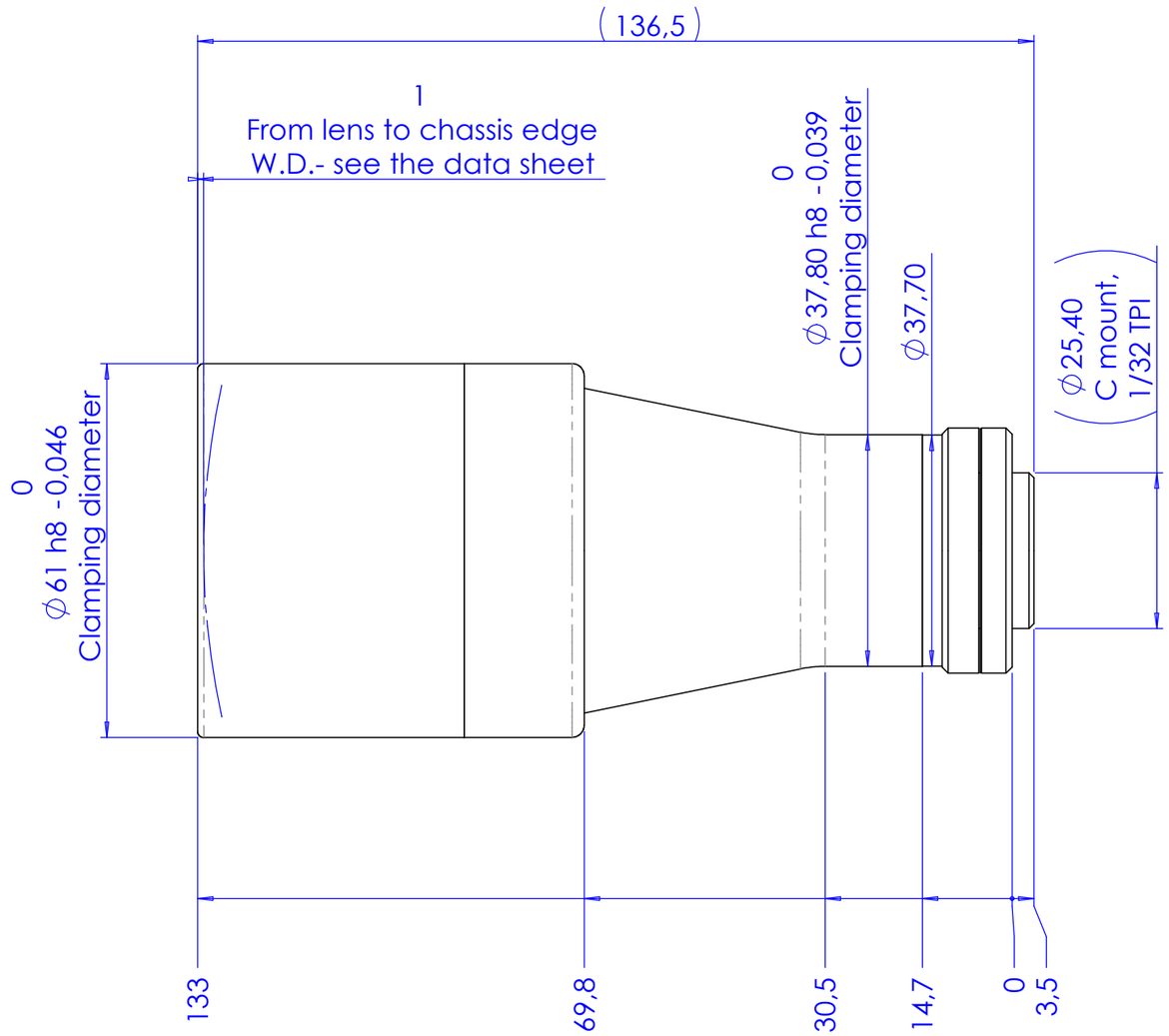

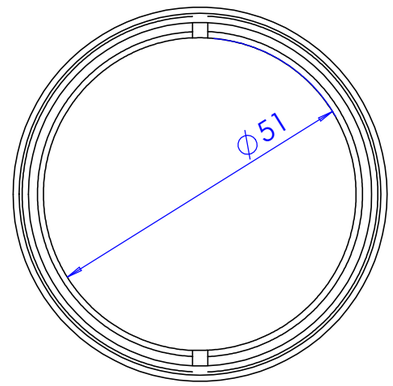

Material	N.A.	Mass	0.46 kg
Surface treatment	N.A.	Scale	1:1
Project-Prod.item/Instrument	Telecentric lens 13 36		

Geometrical tolerance (ISO 2768-2)								Class	K	Undimensioned bevels	1x45°
Linear tolerance (ISO 2768-2)								Class	m		
0.5 ÷3	>3÷ 6	>6÷ 30	>30÷ 120	>120 ÷400	>400÷ 1000	>1000 ÷2000	>2000 ÷4000	Undimensioned radii	R 0.5		
±0.1	±0.1	±0.2	±0.3	±0.5	±0.8	±1.2	±2				

Description: Assembly

	Date	Name
Designed	15/02/06	A.Vismara
Draw	24/03/06	A.Vismara
Checked	X	C. Sedazzari

Drawing No. 01009-0-D

Sheet 1/1

www.opto-engineering.com

Reproduction forbidden without specific authorization

OPTO ENGINEERING S.r.l. - 46100 Mantova Italy - Via Cremona, 28 - Tel. +39 0376 263525 - e-mai: info@opto-engineering.com - http://www.opto-engineering.com